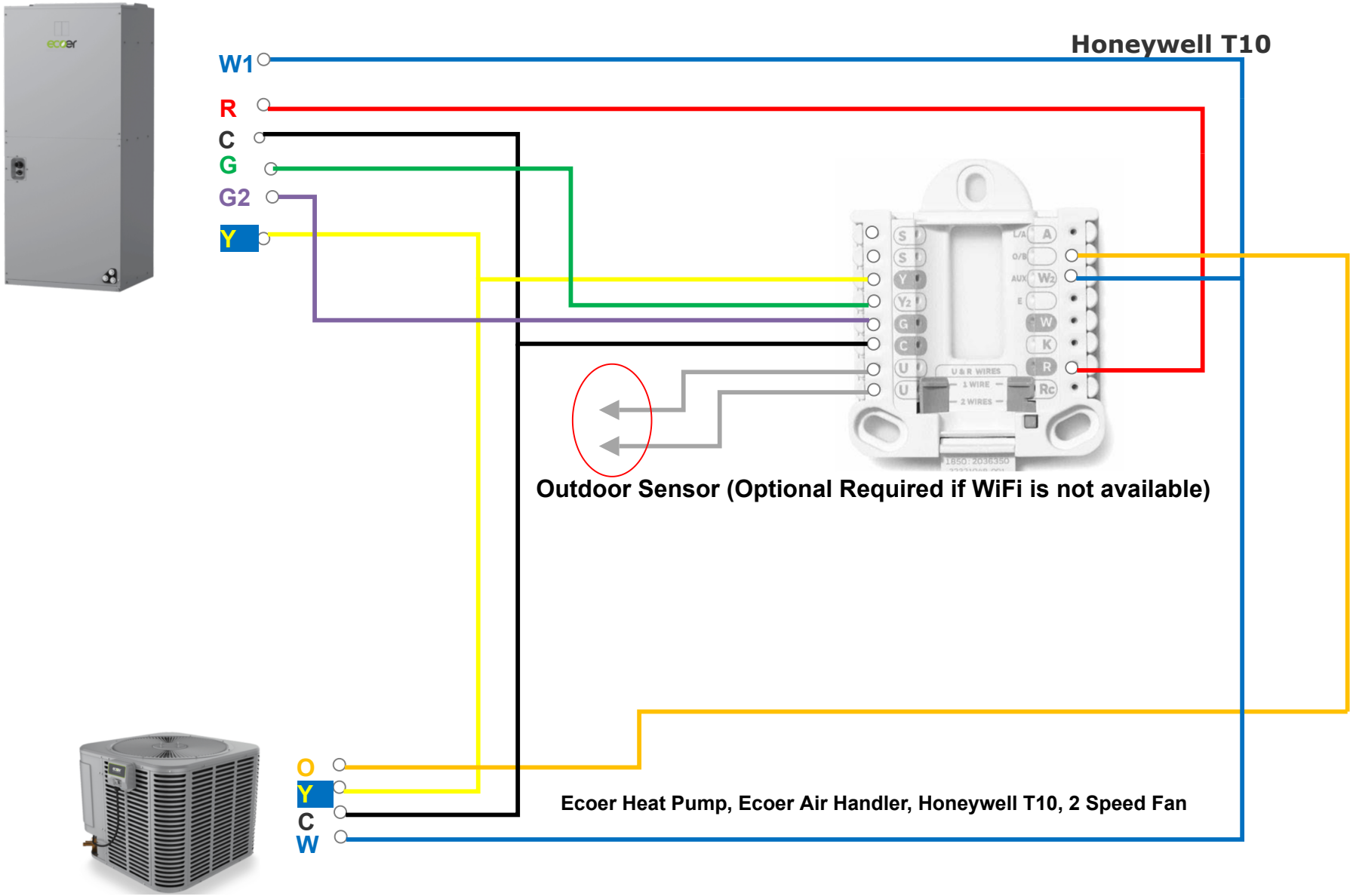
Honeywell T10
W1
R
C
G
G2
Y
Outdoor Sensor (Optional Required if WiFi is not available)
O
Y
C
W
Ecoer Heat Pump, Ecoer Air Handler, Honeywell T10, 2 Speed Fan